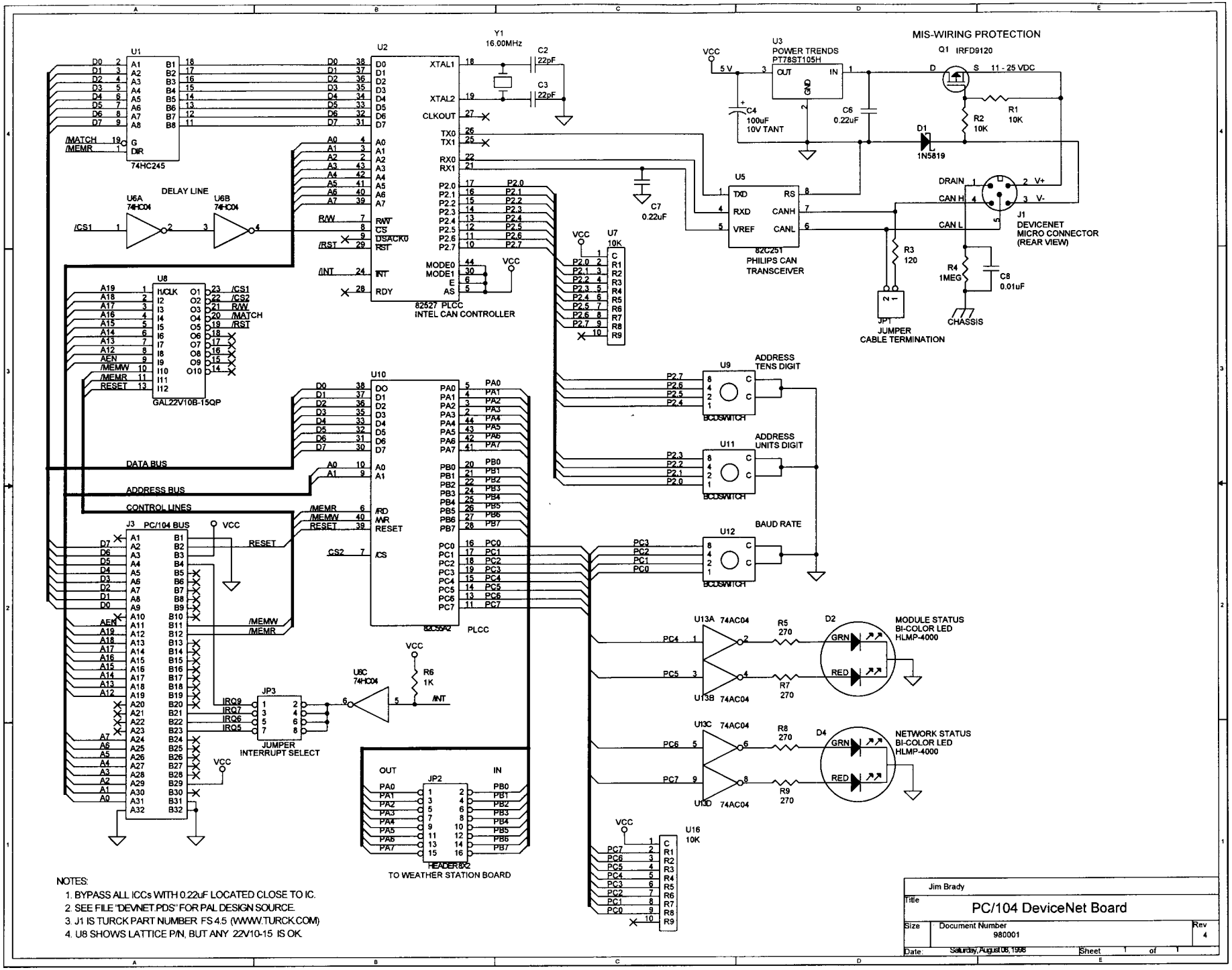

NOTES:

1. BYPASS ALL ICCs WITH 0.22uF LOCATED CLOSE TO IC.
2. SEE FILE "DEVNET.PDS" FOR PAL DESIGN SOURCE.
3. J1 IS TURCK PART NUMBER FS 4.5 (WWW.TURCK.COM)
4. U8 SHOWS LATTICE P/N, BUT ANY 22V10-15 IS OK.

Jim Brady			
Title: PC/104 DeviceNet Board			
Size	Document Number 980001		Rev 4
Date: Saturday, August 08, 1998	Sheet 1 of 1		